JMF DOORS
Made to Measure, Ready to Paint!

Bevelled Edwardian - Technical Specification Sheet

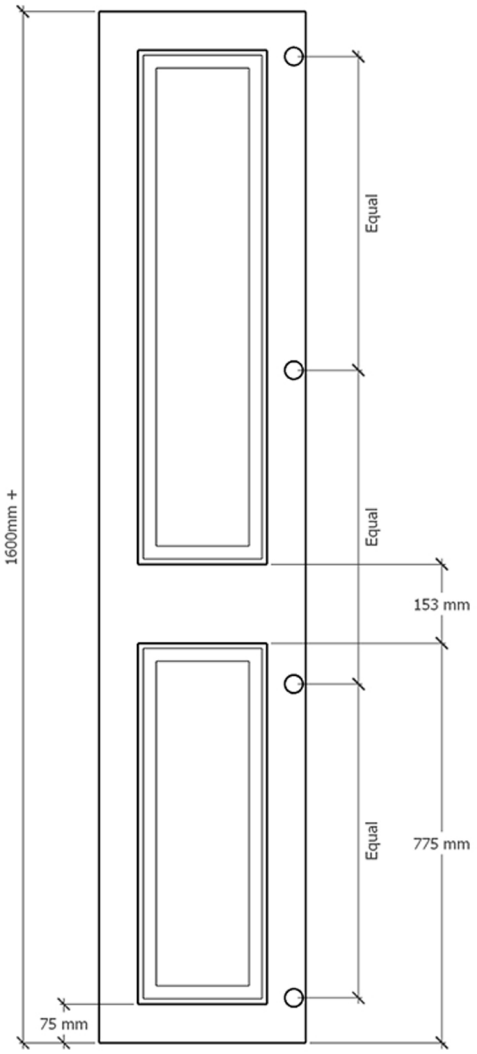

Door Information	
Door Thickness	21mm
Rail Width	75mm Inc moulding
Moulding Width	10mm
Slope Length	25mm
Panel Thickness	12mm

Midrail Information	
Midrail Information	Doors Under 1600mm (H) will have no midrail Doors Above 1600mm (H) will have 1 x midrail
Standard Midrail Position	775mm from the bottom of the door
Midrail Height	153mm
Customisation	Midrail positioned at custom height.

Hinge Information	
Top	87mm from the top of door
Bottom	87mm from the bottom of door
Central	Equally Spaced
Spacing from Edge	23mm
Hole Diameter	35mm
Hinge Type	Cabinet hinges (supplied seperately)

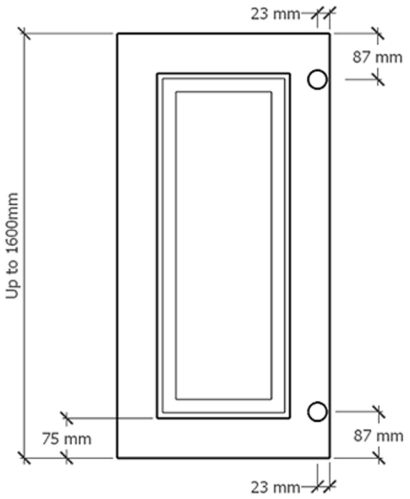

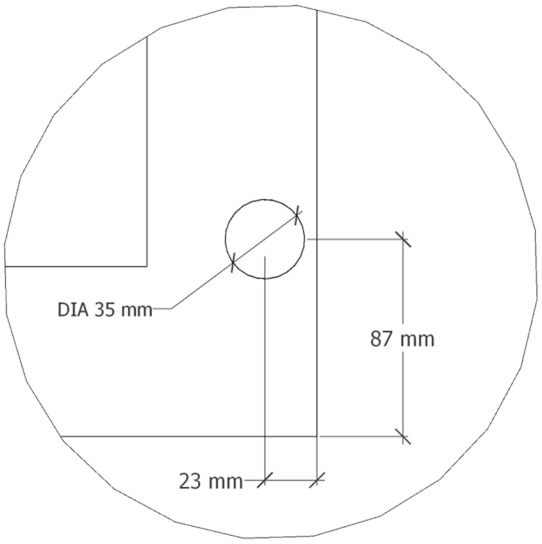

For customisation, Please contact the office for further details before placing your order.

N.B. Drawings not to scale

www.jmfdoors.co.uk **Email: info@jmfdoors.co.uk** **Tel: 0121 328 1643**